Heat Pump Floor Stand Powder Coated

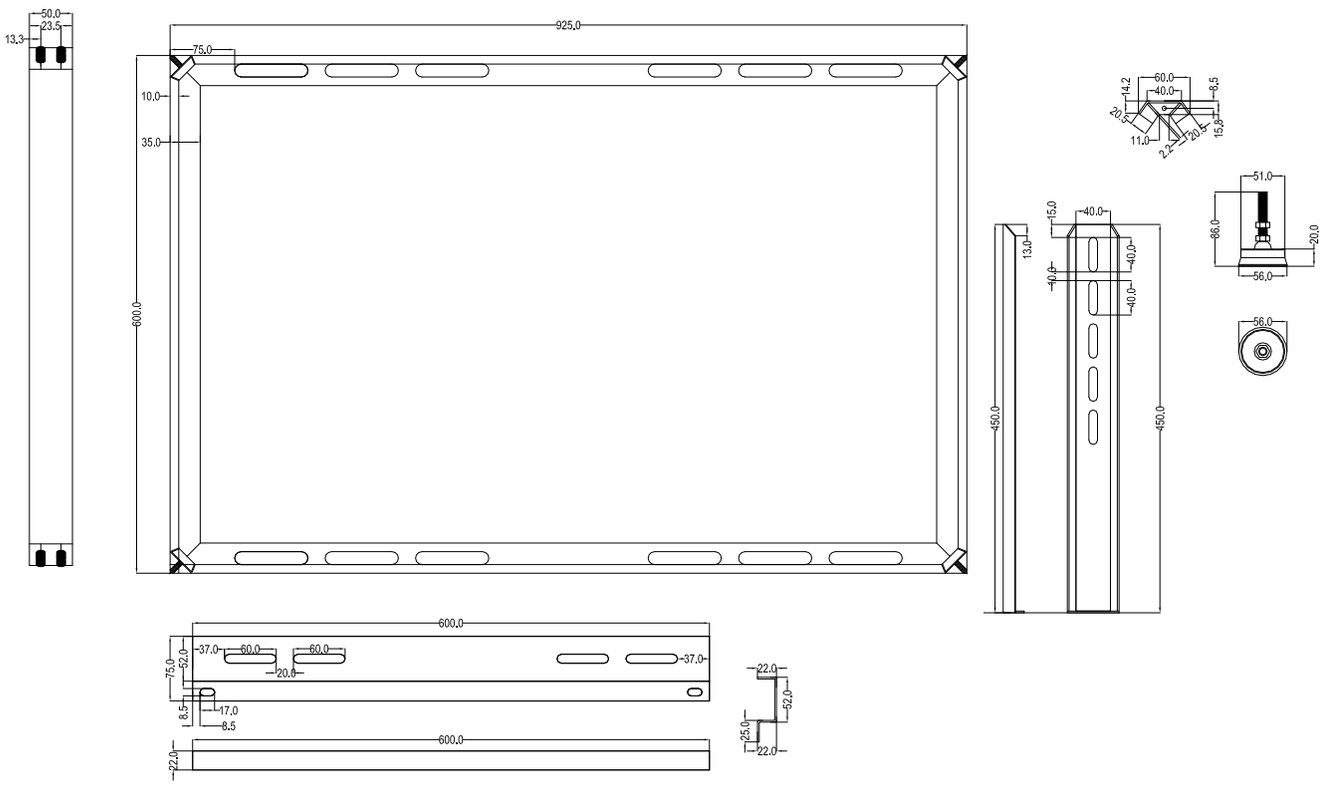

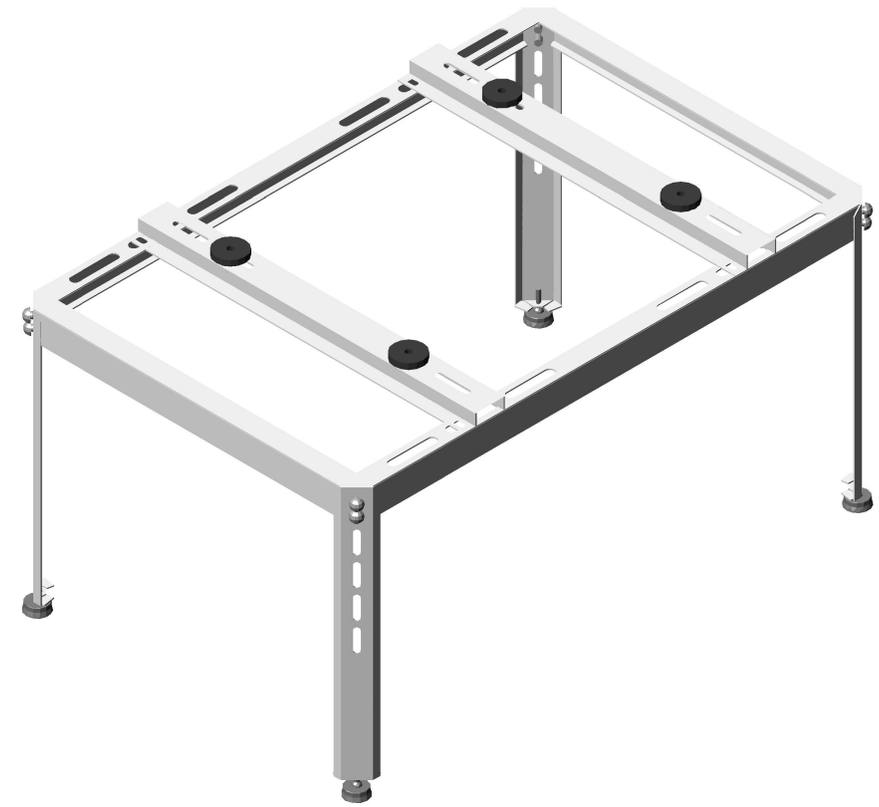

COLARUS GROUP

COLARUS GROUP

Product Code	FSHP-182437-PC	Weight Holding Capacity	200-220 Kg
Colour Finish	Powder Coated	Material Type	MS (Mild Steel)